THIS COPY IS PROVIDED ON A RESTRICTED BASIS AND IS NOT TO BE USED IN ANY WAY DETRIMENTAL TO THE INTERESTS OF PANDUIT CORP.

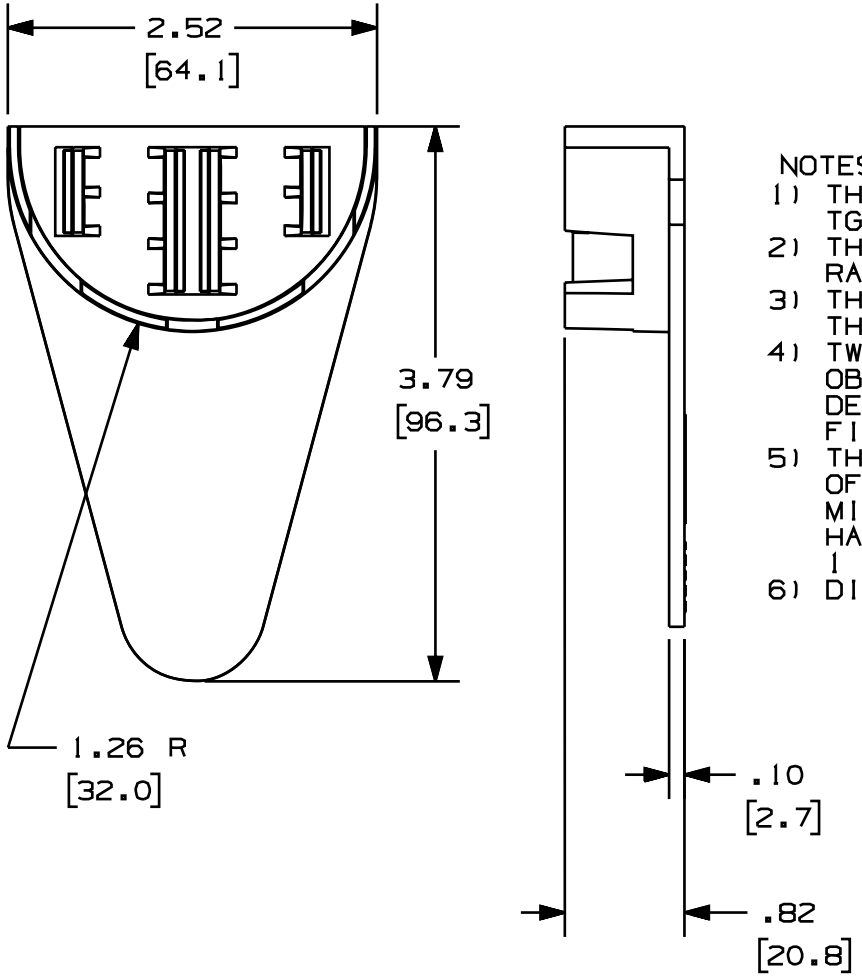

PANDUIT P/N	WEIGHT
TGFSB	0.48 LB/ 10 PCS (217 G / 10 PCS)

NOTES:

1) THIS PART IS TO BE USED WITH THE TG70, TG80, OR TG86 SERIES RACEWAY.
2) THIS BRACKET WILL LATCH ONTO THE CENTER OF THE RACEWAY BASE- IF NO DIVIDER WALLS ARE PRESENT.
3) THIS BRACKET CAN ALSO LATCH OFFSET TO THE CENTER OF THE RACEWAY BASE- IF ONE OUTER DIVIDER WALL IS PRESENT.
4) TWO OF THESE BRACKETS MUST BE INSTALLED IN ORDER TO OBTAIN A COMPLETE FIBER SPOOL. THIS TWO-PIECE SPLIT DESIGN ALLOWS THE BRACKET DISTANCE TO BE ADJUSTED TO FIT THE LENGTH OF CABLE STORAGE REQUIRED.
5) THIS PART CAN STORE A MINIMUM OF 3.28 FEET (1 METER) OF DUPLEX FIBER OPTIC CABLE AT A 1.2 INCH (30 MILLIMETER) MINIMUM BEND RADIUS- WHEN THE SPOOL PORTIONS OF THE BRACKET HALVES ARE TOUCHING. CABLE STORAGE CAN BE INCREASED BEYOND 1 METER BY SPREADING THE BRACKET HALVES FARTHER APART.
6) DIMENSIONS IN PARENTHESES ARE IN METRIC.

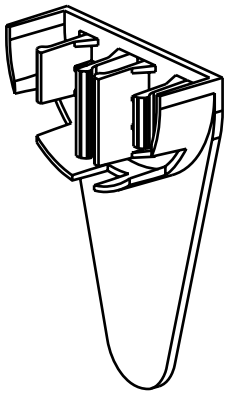

REV	DATE	BY	CHK	DESCRIPTION	ECN	CHK	CUST	SUP
R	3/7/00	JHNU	CAZ	RELEASED TO PRODUCTION.	37270-38	HIW	HIW	

CAD FILENAME/LAYERS: D37270DK_DC_TGFSB_00A.PRT

PANDUIT CORP. TINLEY PARK, ILLINOIS

TG FIBER SPOOL BRACKET
(TGFSB)
CUSTOMER DRAWING

UNLESS OTHERWISE SPECIFIED, DIMENSIONAL TOLERANCES ARE:
(.X) ± (.XXX) ±
(.XX) ±.03(.8) ANGLES ±

UNLESS OTHERWISE SPECIFIED, ALL DIMENSIONS ARE GIVEN IN INCHES, THIRD ANGLE PROJECTION.

DRAWN BY: JHNU
DATE: 3/7/00
CHECKED BY: CAZ
MAT'L: PVC
SCALE: NONE
DRAWING NO.: 37270-38
DWG SIZE: A