Materials
1. Shell, C3604 brass, 2 µm nickel plated
2. Spring contact, BeCu, 2 µm nickel plated
3. Pin, C3604 brass, 2 µm nickel plated
4. Insulator, POM, black

Electrical requirements
Dielectric strength: 1 min @ 500 Vac
Insulation resistance: 100 MΩ @ 500 Vdc
Contact resistance: 30 mΩ or less
Rated voltage: 24 Vdc
Rated current: 5 A

Mechanical requirements
Insertion force: 0.3-2.5 kgf
Withdrawal force: 0.3-2.5 kgf
Durability: 5000 mating cycles while maintaining; min 0.3 kgf insertion force, min 0.2 kgf withdrawal force and less than 100 mΩ contact resistance.

Environmental requirements
Damp test: 40 °C, RH 90-100% for 96 hrs. Cool to ambient and recover for 2 hours. Maintain dielectric strength of 500 Vac for 1 min, insulation resistance of 50 MΩ @ 500 Vdc minimum and a contact resistance of 100 mΩ or less.

Dry test: 70 °C, RH 70-85% for 96 hrs. Cool to ambient and recover for 2 hours. Maintain insulation resistance of 50 MΩ @ 500 Vdc minimum and a contact resistance of 100 mΩ or less.

Salt spray test: 35 °C, RH 90-95%, 5% NaCl mist for 24 hrs. Wash parts after test. Maintain mechanical requirements and a contact resistance of less than 80 mΩ.

Operating range
-25 to 70 °C, relative humidity of 85% or less

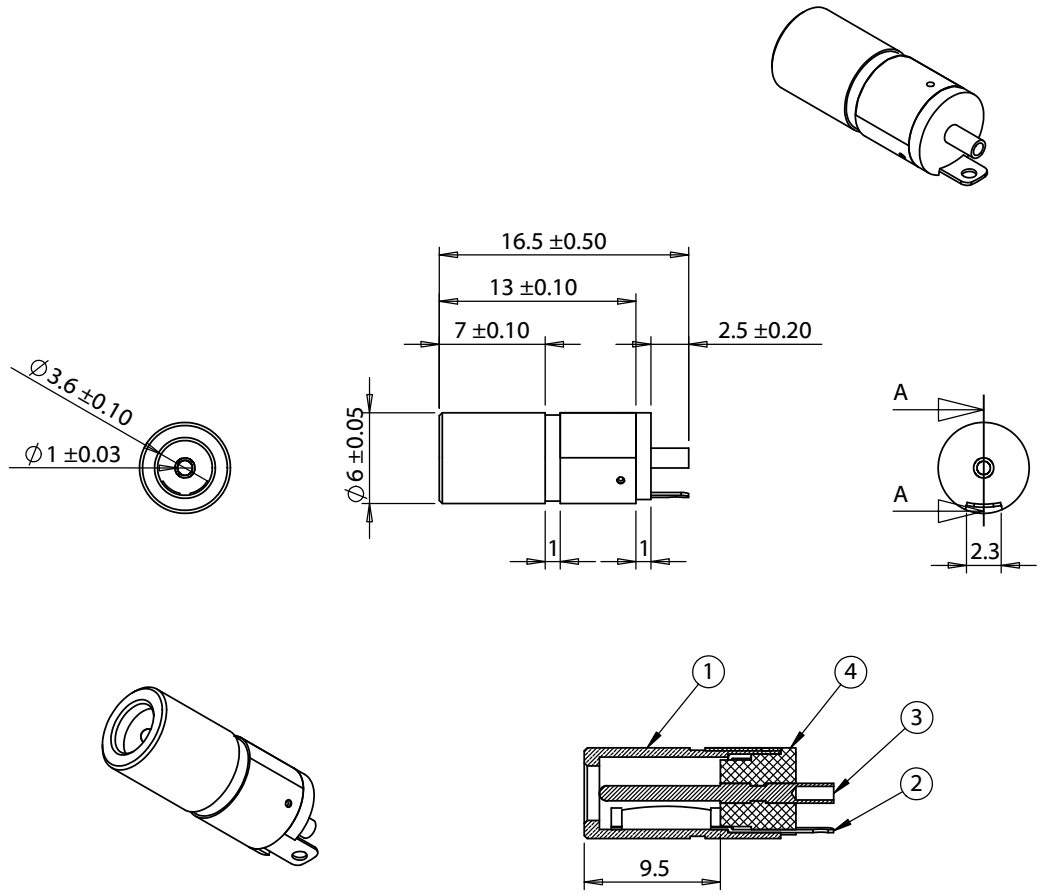

Revision:	Date:	Description:
A	10/19/2009	Initial release
A1	12/8/2011	Updated measurements to match standards
A2	3/14/2013	Updated spec format

Prepared: GL 2016.03.31 16:43:39 -07'00'

Verified: LA Digitally signed by LA DN: cn=LA, o=Tensility, ou=Engineering, email=DA002@Tensility.com, c=US Date: 2016.03.31 17:00:12 -07'00'

Dimensions are in millimeters.
Tolerances:
X: ± 0.5 mm
X.X: ± 0.3 mm
X.XX: ± 0.05 mm

Notes:
RoHS and REACH compliant

Function test: no open, no short circuit, no intermittent

Description:
Connector, dc jack, 3.5x1.1xL16.5 mm, molding style

TENSILITY
tel 1.541.323.3228 800 877.670.7118
fax 1.541.323.4202 web tensility.com

Size: A
Part number: 50-00045
Scale: 2:1
Sheet 1 of 1

5 4 3 2 1