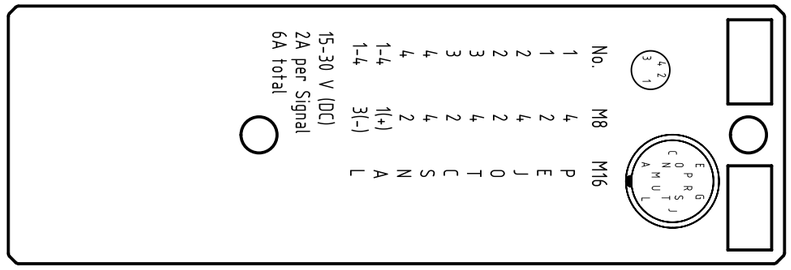

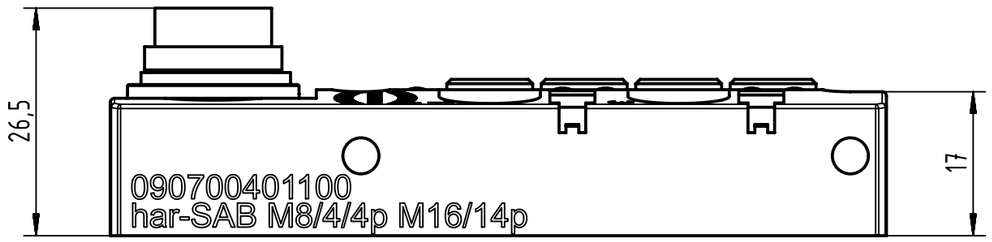

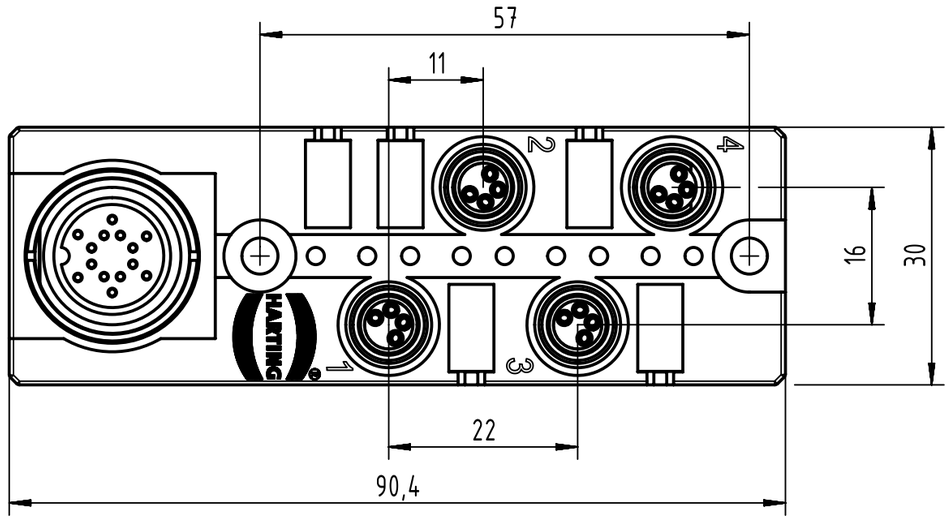

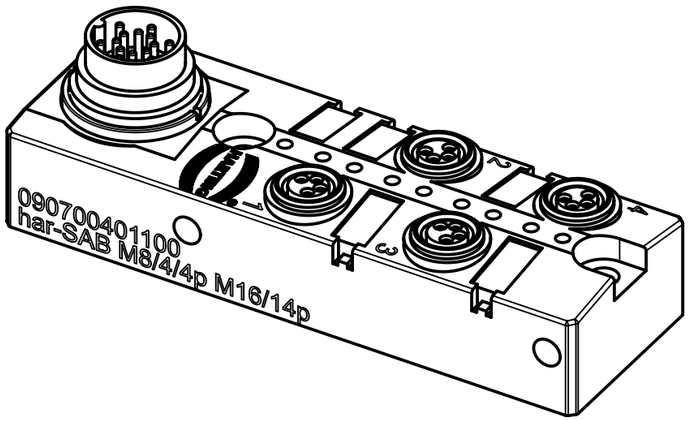

Electrical data:
-Rated voltage: 15-30V DC
-Nominal: 2 A per Contact
-Current: 6 A max total

Loading plan

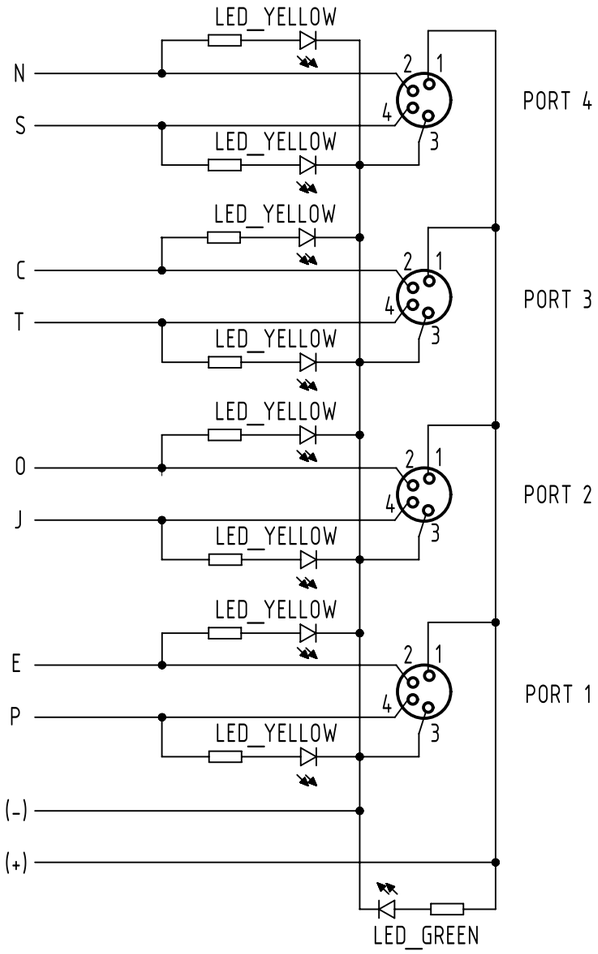

- Protection level: IP 67
- Temperature range: -20°C...+80°C

All Dimensions in mm	Tech. Character.	Free size tol.	According to production drawing		
All rights reserved	Created by MUNTEANV	Inspected by POPESCUD	Standardisation AVRAM	Date 2017-04-24	State Final Release
Department HCS - RO	Title har-SAB M8/4/4p M16/14p				Doc-Key / ECM-Nr. 100689727/UGD/000/B 500000118447
HARTING Customised Solutions D-32427 Minden	Type TB	Number 090700401100		Rev. B	Page 1/1

A3